| CODE | DESCRIPTION | POS. | GR. |
|---|---|---|---|
| K070019972B | FRONT PLASTIC PART | 1 | |
| K070020072A | RIGHT FILTER SADDLE | 2 | |
| K070021372A | LEFT FILTER SADDLE | 3 | |
| K070020172B | FILTER+FRAME | 4 | |
| G0540A | SECCOTECH REAR PLASTIC PART ASSY | 5 | |
| K070020372A | HANDLE | 6 | |
| K070022672A | HANDLE CAP | 7 | |
| J190002568A | HANDLE RUBBER INSERT | 8 | |
| K070020472B | DRAINING CAP | 9 | |
| K070020568A | TOP COVER | 10 | |
| K070020698B | WATER CONTAINER | 11 | |
| K070021098A | FLOAT | 12 | |
| L020027200A | ELECTRONIC/CONTROL PANEL GR. | 13 | |
| K070023772A | KEYBOARD | 14 | |
| K070005795A | GLASS | 15 | K070005700A |
| K070021200A | KEYBOARD SURFACE FILM | 16 | K070021200A |
| K210015800A | CONTROL BOARD | 17 | |
| K210017500A | HUMIDITY SENSOR BOARD+FLAT | 18 | |
| K200003500A | POWER BOARD+FLAT | 19 | |
| K210017600A | PROBE | 20 | |
| K210016200A | MICROSWITCH WIRING | 21 | |
| J060003500A | MOTOR | 22 | |
| J060003600A | FAN | 23 | |
| G0541A | SECCOTECH PIPES+HE ASSY | 24 | |
| L020027600A | COMPRESSOR GR | 25 | |
| G0542A | COMPRESSOR ACCESSORIES ASSY | 26 | |
| K070020972B | BASIS | 27 | |
| J190002300A | VIBRATION DAMPER | 28 | |
| L020031100A | WHEELS GR. | 29 | |
| J190002496B | WATER DRAINING CAP | 30 | |
| K210016300A | COMPRESSOR WIRING | 31 | |
| K160011000A | POWER CABLE | 32 | |
| K210017400A | MICROSWITCH | 33 | |
| K070020772B | CONVEYOR | 34 | |
| G0543A | SECCOTECH INTERNAL PLASTIC PART ASS | 35 | |
| K100030800A | DISCHARGE PIPE | 36 | |
| K100030900B | SUCTION PIPE | 37 | |
| K100031200A | CAPILLARY+FILTER | 38 | |
| K070023896B | CABLE FASTENER | 39 | |

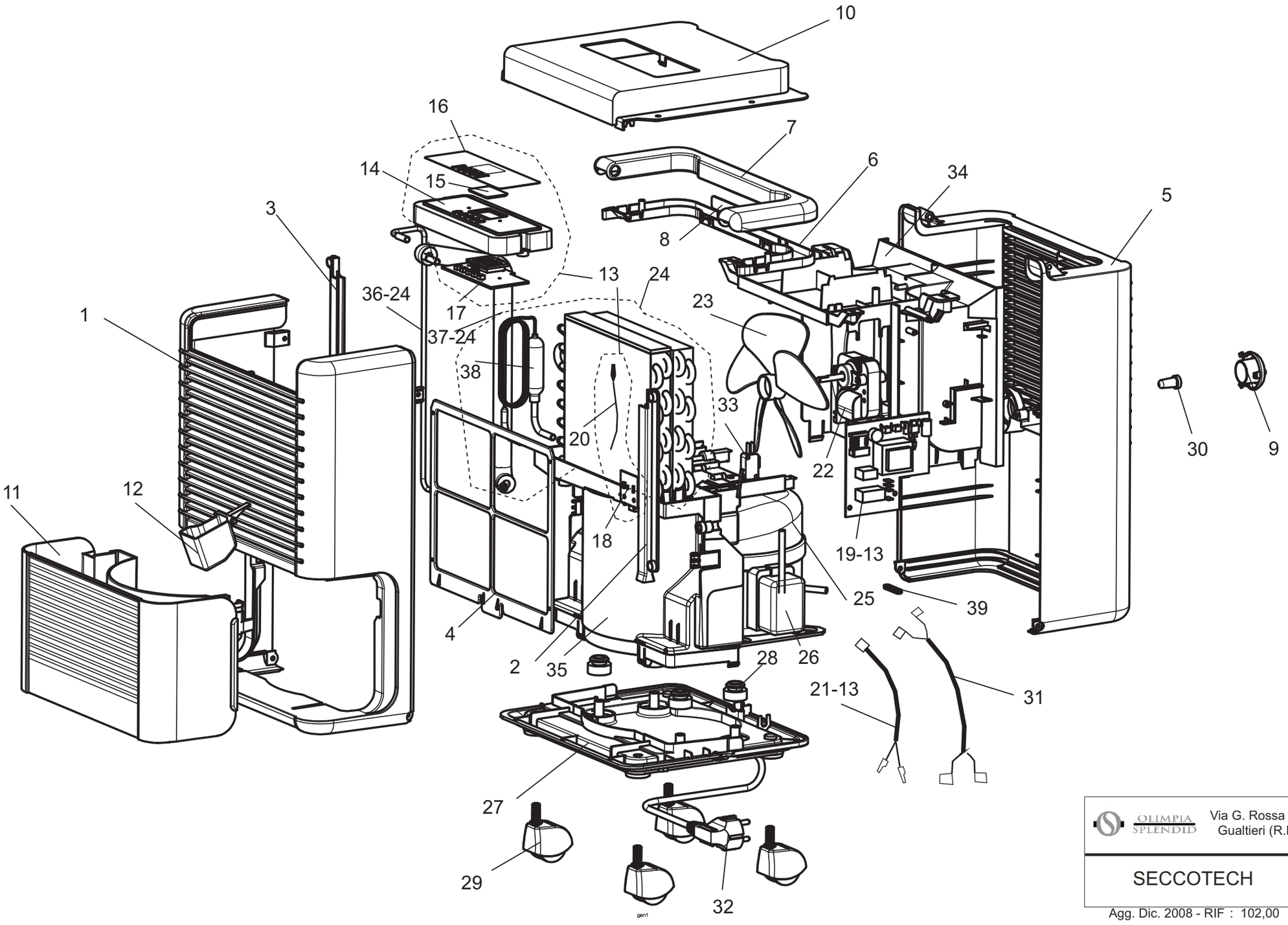


OLIMPIA SPLENDID
Via G. Rossa 1-3
Gualtieri (R.E.)

SECCOTECH

Agg. Dic. 2008 - RIF : 102,00